TBN 3.4 5MP Lens Technical Data

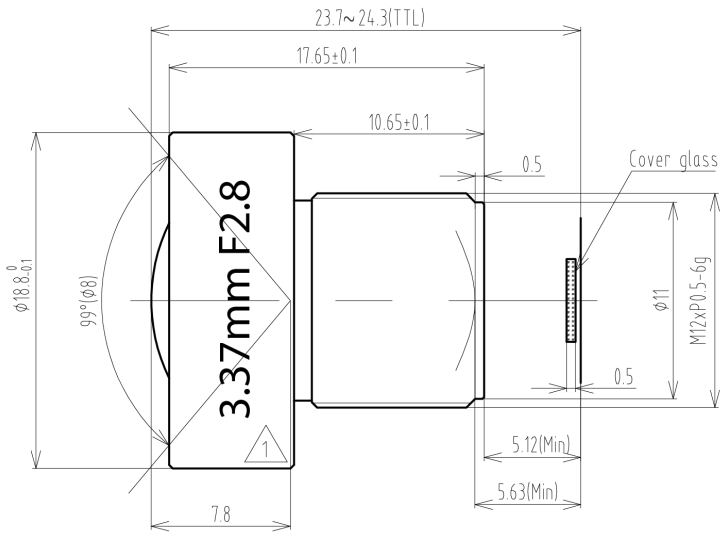

Specifications	
Format	1/2"
Resolution	5 MP
Pixel Size	3,45 µm
Mount	M12x0.5
Focal Length (f)	3.4 mm
Image Circle Diameter	8 mm
Iris	F2.8
Minimum Object Distance (MOD)	10 cm
Distortion	1 %
Filter Thread	n/a
Mass	7,7 g
Operating Temperature	-5 °C - 50 °C

© 2026 The Imaging Source - Specification is subject to change without any notice.